HALF-WAVE AND FULL-WAVE POWER CONTROL

EXPERIMENT NUMBER 08

OBJECTIVES:

- Describe the characteristics of SCR and Triac.
- Design half-wave power control circuits using SCR.
- Design full-wave power control circuits using Triac.

APPARATUS:

DC power supply, transformer, multimeter, oscilloscope, breadboard, 2P4M SCR, BT136 triac, 12 V lamp, 2 × 1 kΩ, 3.3 kΩ, 10 kΩ and 15 kΩ resistors, 20 kΩ potentiometer, and Connecting wires.

THEORY AND DIAGRAMS:

Silicon-controlled rectifier

Silicon-controlled rectifier (SCR) is a four-layer device with three terminals: anode, cathode, and gate. SCRs are mainly used in devices where the control of high power, possibly coupled with high voltage, is demanded. Their operation makes them suitable for use in medium- to high-voltage AC power control applications, such as lamp dimming, power regulators and motor control. Figure 1 shows the pin configuration of 2P4M SCR, which is a commonly used device, and its basic construction, the symbol and the equivalent circuit.

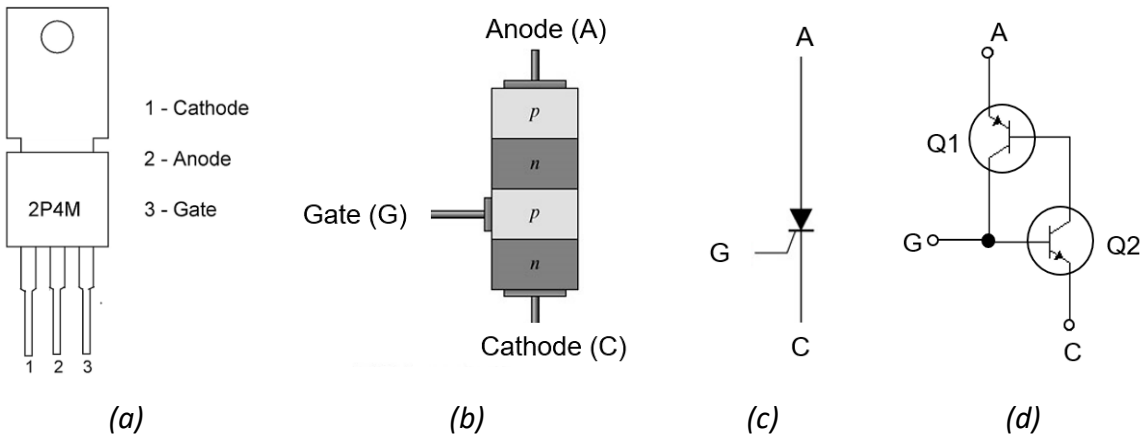

Figure 1: 2P4M SCR, (a) Pin configuration, (b) Basic construction, (c) Circuit symbol, and (d) Equivalent circuit

The SCR can be turned ON by exceeding the forward breakover voltage or by gate current. As shown in the SCR characteristic curves of Figure 2, the gate current controls the amount of forward breakover voltage required for turning it ON. The $V_{BR(F)}$ decreases as I_G is increased.

As soon as the SCR is triggered and turned ON, the voltage across it will decrease to a minimum value and conduct as long as the forward current exceeds I_H.

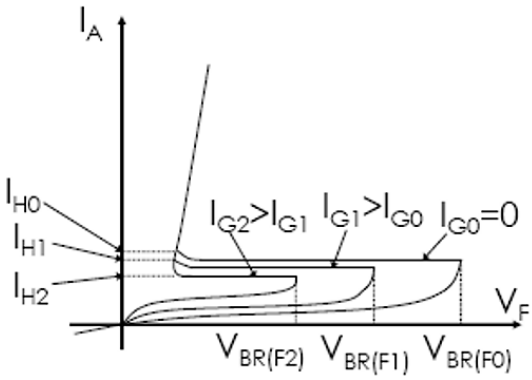

Figure 2: SCR characteristic curves for different I_G values

Two ways to drop the SCR out of conduction are (i) Anode current interruption and (ii) Forced commutation. As shown in Figure 3(a), the anode current can be interrupted by breaking the anode current path around the SCR or dropping the anode voltage to the point that $I_A < I_H$. As shown in Figure 3(b), force commutation uses an external circuit to momentarily force current in the opposite direction to forward conduction, thereby turning OFF the SCR. SCRs are commonly used in AC circuits, which forces the SCR out of conduction when the AC reverses.

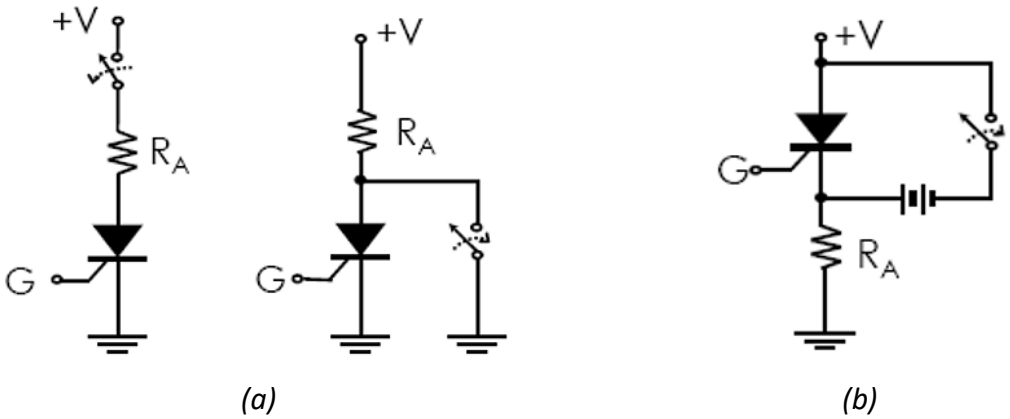

Figure 3: (a) Anode current interruption and (b) Forced commutation

Triac

A triac is a bidirectional, three-electrode AC switch that allows electrons to flow in either direction. It is the equivalent of two SCRs connected in a reverse-parallel arrangement with gates connected to each other. A triac is triggered into conduction in both directions by a gate signal like that of an SCR. Figure 4 shows the pin configuration of the BT136 triac, which is a commonly used device, and its basic construction and symbol. Figure 5 shows the characteristics curves of triac.

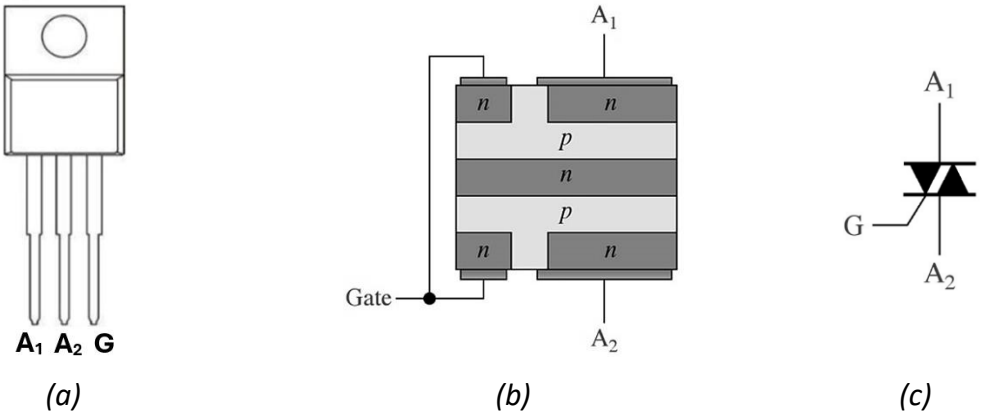

Figure 4: BT136 triac, (a) Pin configuration, (b) Basic construction, and (c) Circuit symbol

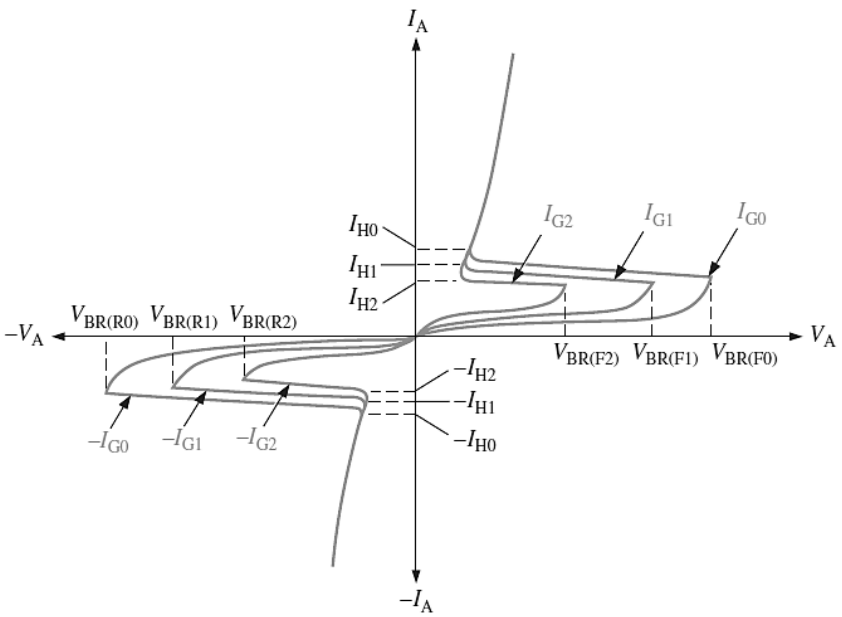

Figure 5: Triac characteristic curves for different I_G values

PROCEDURE:

1. To observe the SCR's turn ON and turn OFF action, construct the circuit shown in Figure 6.
   - As the load, use the 12 V lamp and as S1 and S2 pushbuttons, use a couple of connecting wires.
   - To trigger the gate of the SCR ON, it is necessary to provide 0.8 V (as per the datasheet of 2P4M SCR) with respect to the cathode terminal. Using the provided information and components, calculate and choose suitable values for R1 and R2 resistors.

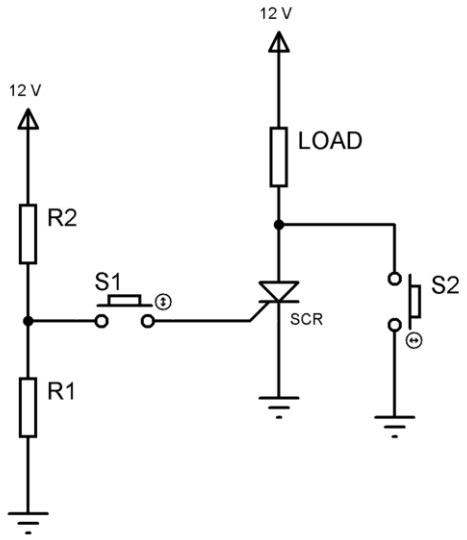

Figure 6

2. To turn ON the load, press and release the pushbutton S1, and to turn it OFF, use S2. Use a voltmeter to measure the voltages across the load and SCR when the load is turned ON and OFF. Record the measure values.
3. To demonstrate the SCR's applications as a half-wave power controller, connect the circuit shown in Figure 7(a).

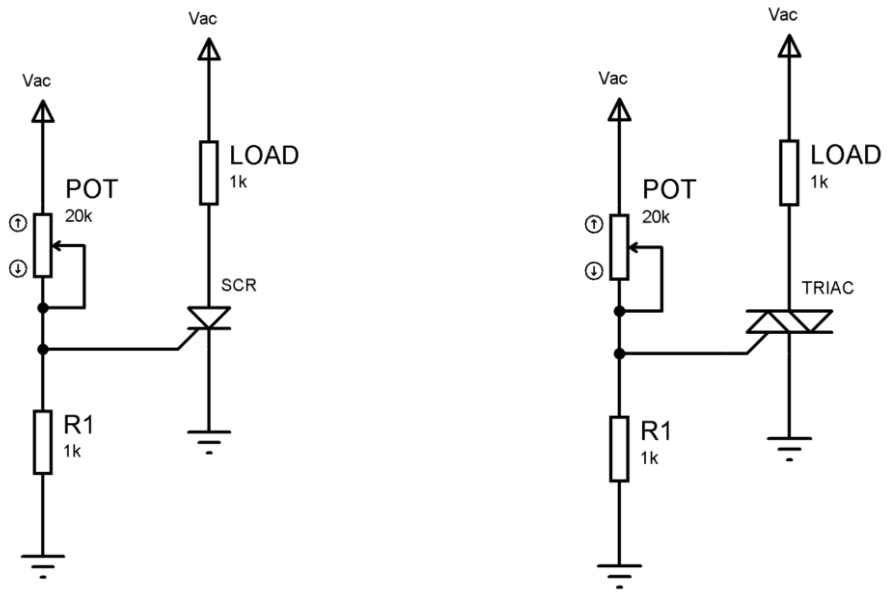

(a) *(b)*

Figure 7

4. As V_{ac}, use the 12 V AC output of the transformer. Connect the oscilloscope to display the waveform across the load.
5. Slowly adjust the pot so that the SCR is triggered at approximately 90° phase of the positive half-cycle of the input waveform. Draw the input and load waveforms separately.
6. Repeat step (5) for 45° phase.

7. To demonstrate the Triac's applications as a full-wave power controller, connect the circuit shown in Figure 7(b).
8. Repeat steps (4) to (6).

DISCUSSION:

Write your own discussion.